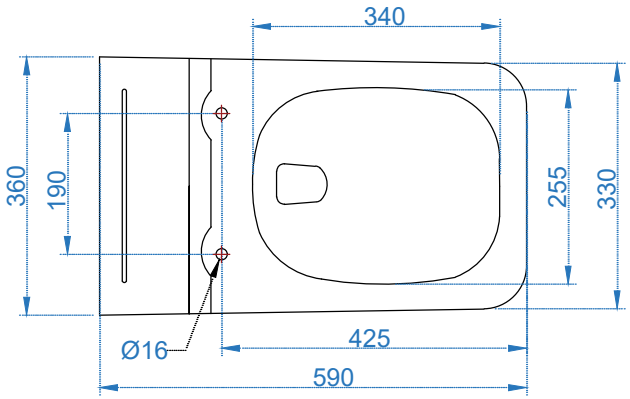

TOP VIEW

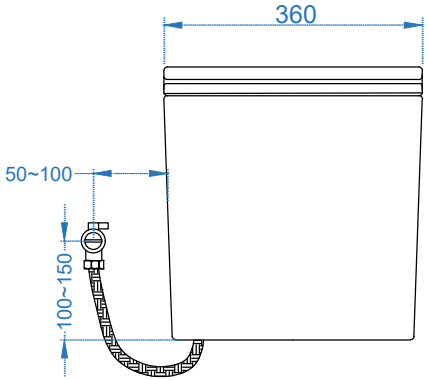

FRONT VIEW

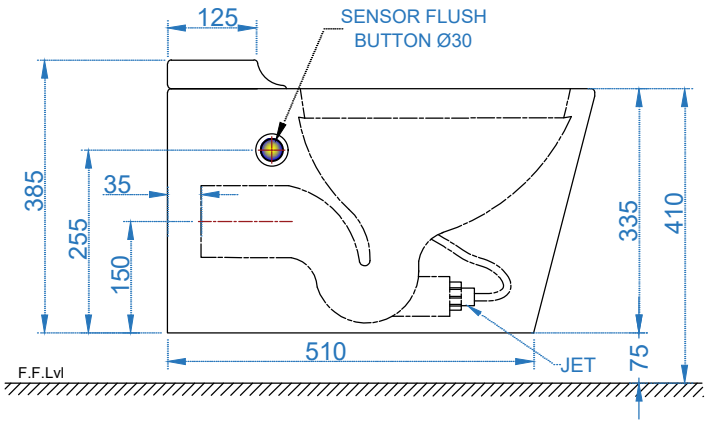

SIDE VIEW

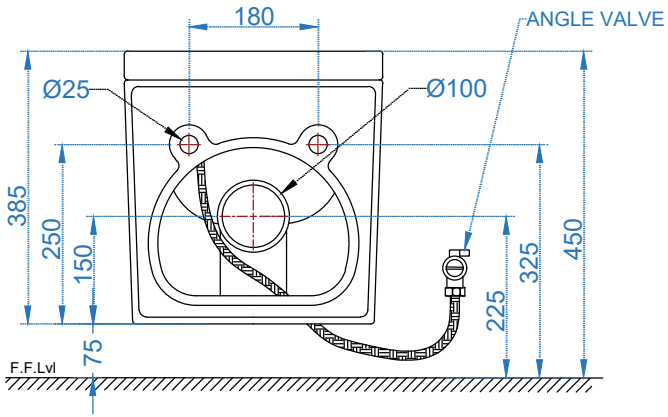

BACK VIEW

SOMANY Bathware

Somany Bathware
Corporate Office : F-36, Sector-6, Noida - 201301, Uttar Pradesh
Website : www.somanyceramics.com
E-mail : marketing@somanyceramics.com
Customer Service : customer.support@somanyceramics.com
Toll free : 1800-1030-004

ITEM CODE	**17112026913101**
ITEM TYPE	Elysees Sensor Tankless Wall Hung WC (P-Trap)
ITEM SIZE	360x590x385 mm

ALL DIMENSIONS ARE IN MM.
(TOLERANCE ± 5 MM)